Analog Synth
MS1 - VCO

Colin DeChambeau, Jett Pacheco, Gray Lampkin

Objectives

- End goal: Analog Synthesizer breadboard circuit that sequences a VCO producing multiple wave types, individual VCAs, and an envelope with multiple effects and filters (phase shift, high-low pass, ext)

- For MS1, we made the first VCO using an Astable Multivibrator circuit, that generates 2 waves: Square and triangle. We currently have no amp, so we listened to the processed audio using the AD3 board’s signal measurement tool on our laptops.

Simulated Schematic -

Our Voltage Controlled oscillator uses a OP97F op-amp feedbacking into its positive and negative terminals. the negative runs through a 10kΩ potentiometer and 0.1μF capacitor to create an exponential build and decay of voltage at node A. while the positive terminal runs through a simple two 10kΩ resistor voltage divider.

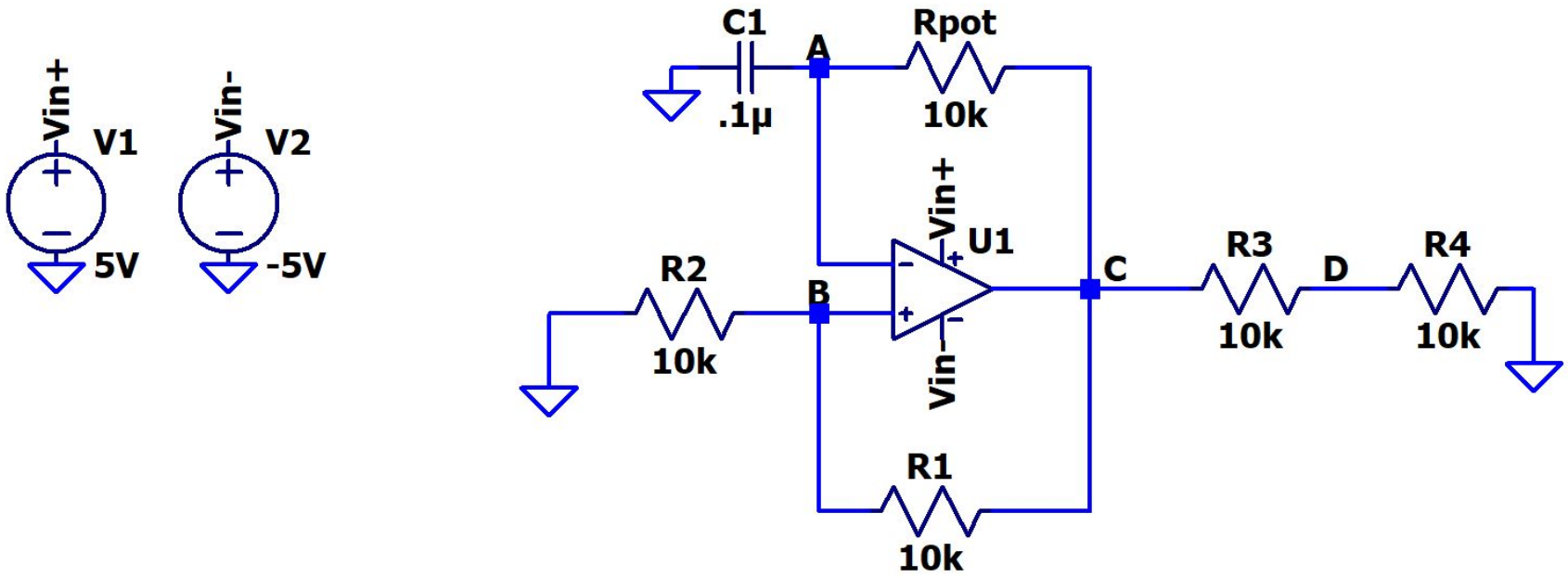

Simulation Measurement-

When ran in LTSpice this results in the expected exponential triangle wave at node A and square wave at node B, both oscillating between 2.5V and -2.5V.

The period is then contingent on the resistance of the potentiometer, going from roughly 2ms at 10kΩ, to 1ms at 5kΩ, to 0.5ms at 2.5kΩ, picture below is measured at 10kΩ

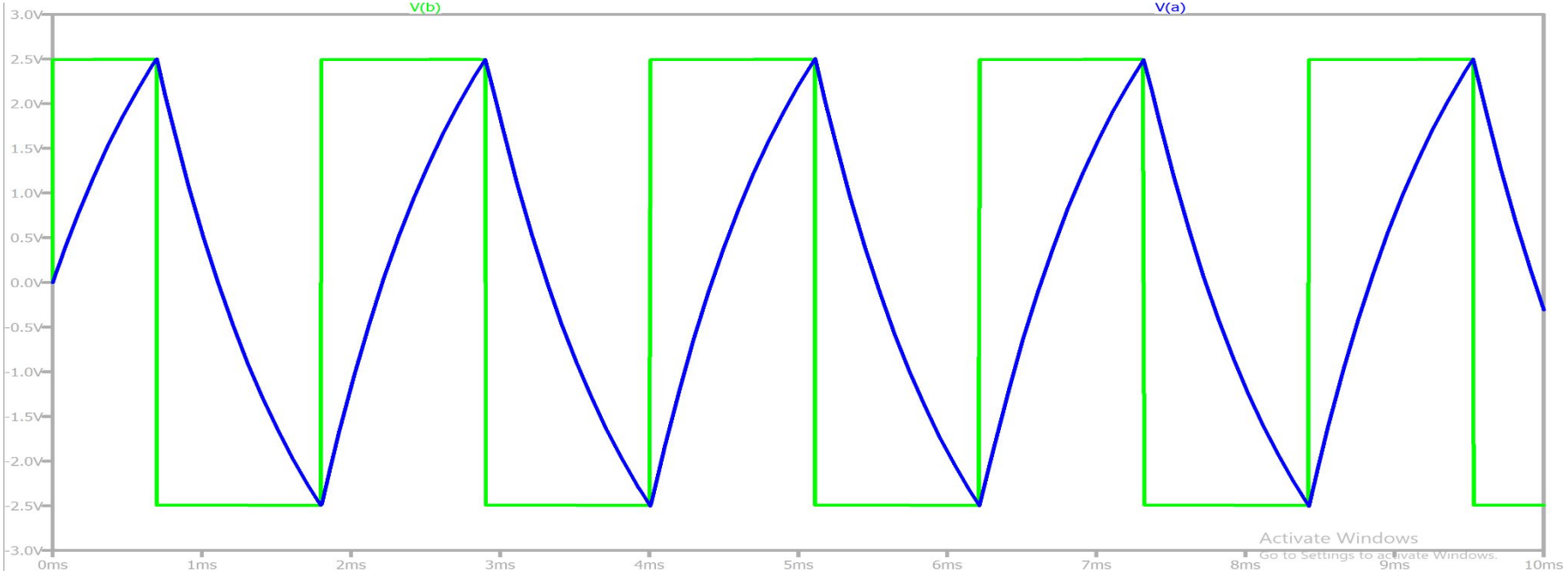

Physical Schematic -

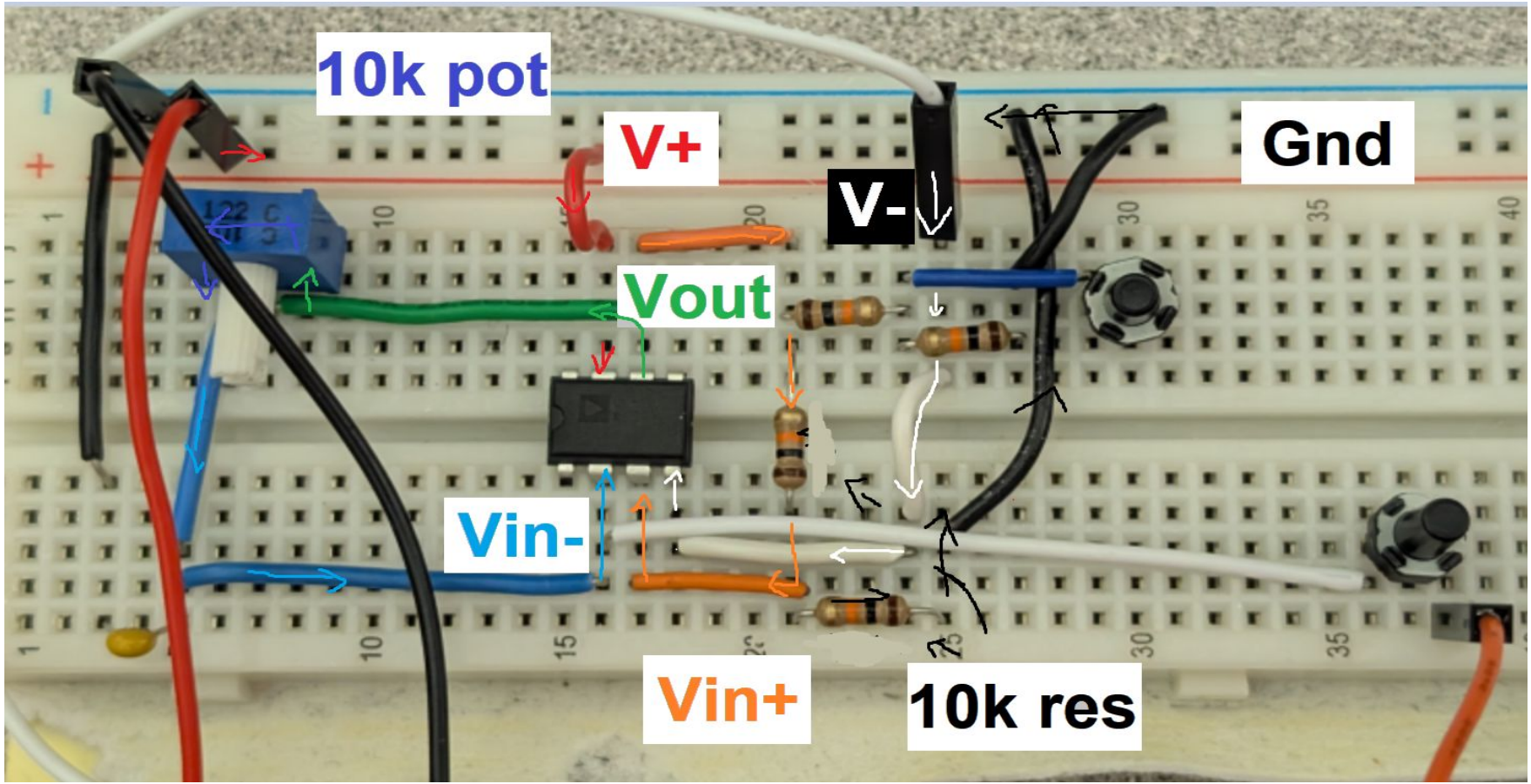

Experimental Measurement -

Measuring the circuit in Waveforms yields a nearly identical graph to LTspice showing it’s functioning as intended and simulated, changing frequency of the wave as the input voltage is adjusted by the potentiometer

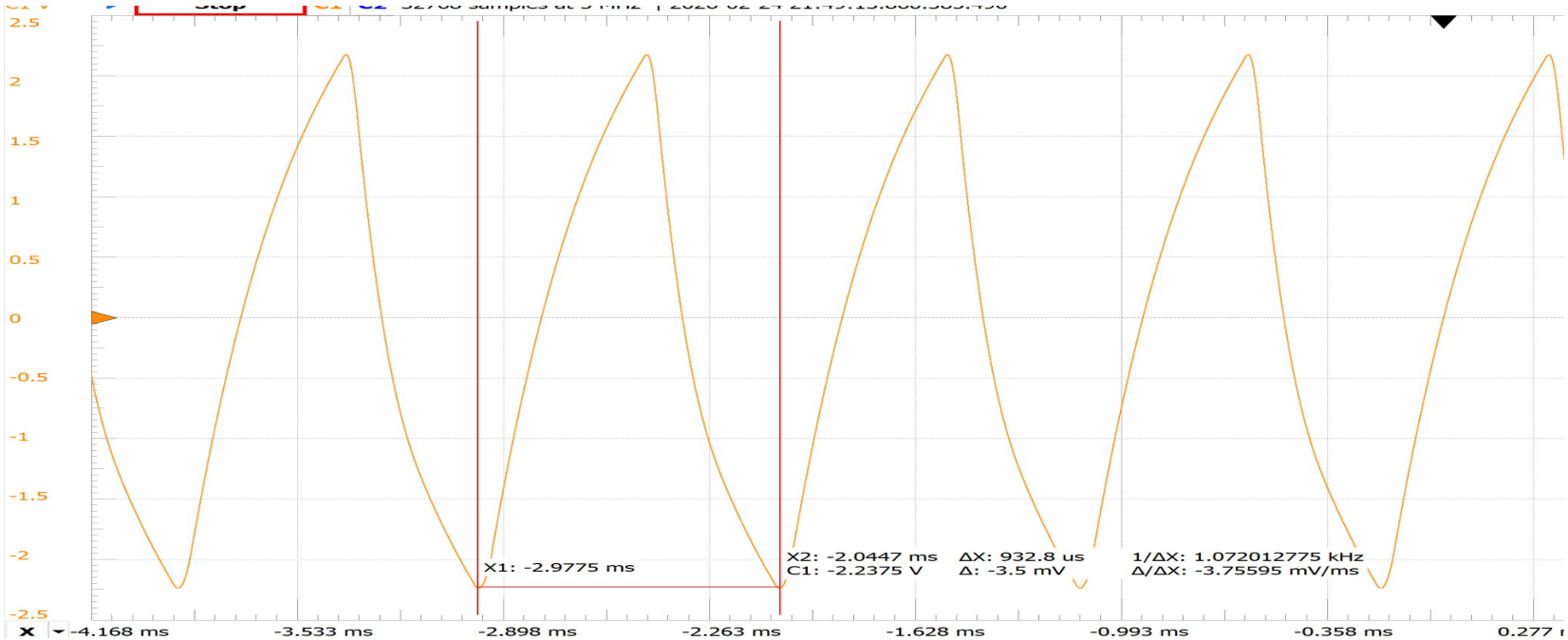

Problems Encountered and Design Choices-

We switched our goal wave a few times, originally wanting to produce a Saw Wave, then Deciding a Triangle and Square would be easier. We then Struggled finding a functional schematic for a bit, making us flip flop between 555 timers, schmitt trigger chips, or just making a schmitt trigger using standard op-amps, of which we settled on the last one. There was a bit of troubleshooting in constructing the circuit but things we’re easier once we iterated on our plan.

After all this we now have a circuit that can produce 2 separate waves that can have their frequency adjusted by the potentiometer and have them read through WaveForms audio function to play constant tones.

Next Milestone Plans -

- We plan on adding a separate Op-Amp VCA (Voltage Controlled Amplifier) speaker for each wave output to manually control volume, on top of the frequency we have from MS1, for each output Wave.
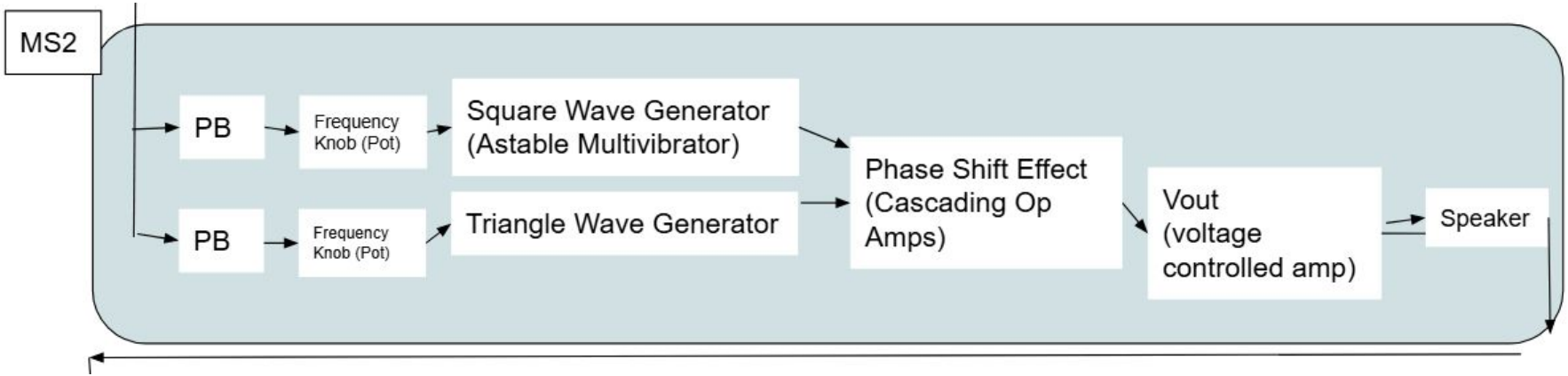
- We also plan on using a cascading Op-Amp to add in a phase shift effect to alter the wave output.